QC STORY PROJECT

PROJECT TITLE :-

To eliminate Spot burr concern at D pillar outer flange LH/RH

Mahindra and Mahindra Ltd, Plant I, Scorpio Body shop.

	Plan	Actual
Start Date	20.06.12	20.06.2012
Completion Date	20.09.12	23.09.2012

Current Status:

Completed

Cross Functional Team

No	Description	Name	Designation	Dept	Phone	Email
1	Team Leader	**S.S.PIMPLAPURE**	ASST. MANAGER	SCORPIO BODYSHOP	9503500998	Pimplapure.sanket2@ mahindra.com
2	Mentor	**SURYAVANSHI R G**	DGM & HOD SCORPIO BODYSHOP	SCORPIO BODYSHOP	9881378988	SURYAVANSHI.RAVINDRA@ mahindra.com
3	Member 1	**GANGURDE M.**	ASST. MANAGER	SCORPIO BODYSHOP	9922644399	GANGURDE.MANGESH1@ mahindra.com
4	Member 2	**MORE MANOJ**	DEPUTY MANAGER	SCORPIO BODYSHOP	9922433518	MORE.MANOJ@ mahindra.com
5	Member 3	**PUNDE RAJENDRA**	ASST. MANAGER	SCORPIO BODYSHOP	9922228599	PUNDE.RAJENDRA@ mahindra.com

1. Select the Theme

Brief description of Problem

What: Repetitive spot burr concern at D pillar LH/RH

Where: Stn#30 & Stn#40 side assy. LH/RH

Who: Concern reported by side check man & Buyoff operator

When: Daily (1st and 2nd shift)

Why: reason unknown high rework incidences

How: Avg. @ 35 incidences per day

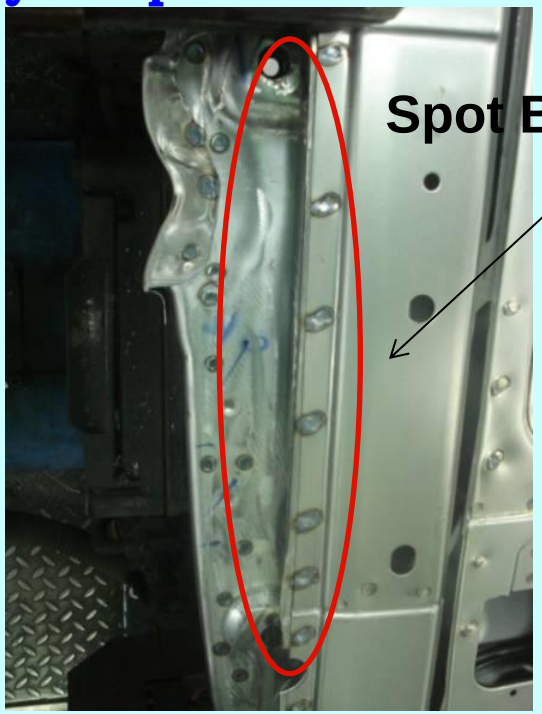

2. Justify the choice (reasons)

Spot burr data for month April & May '12

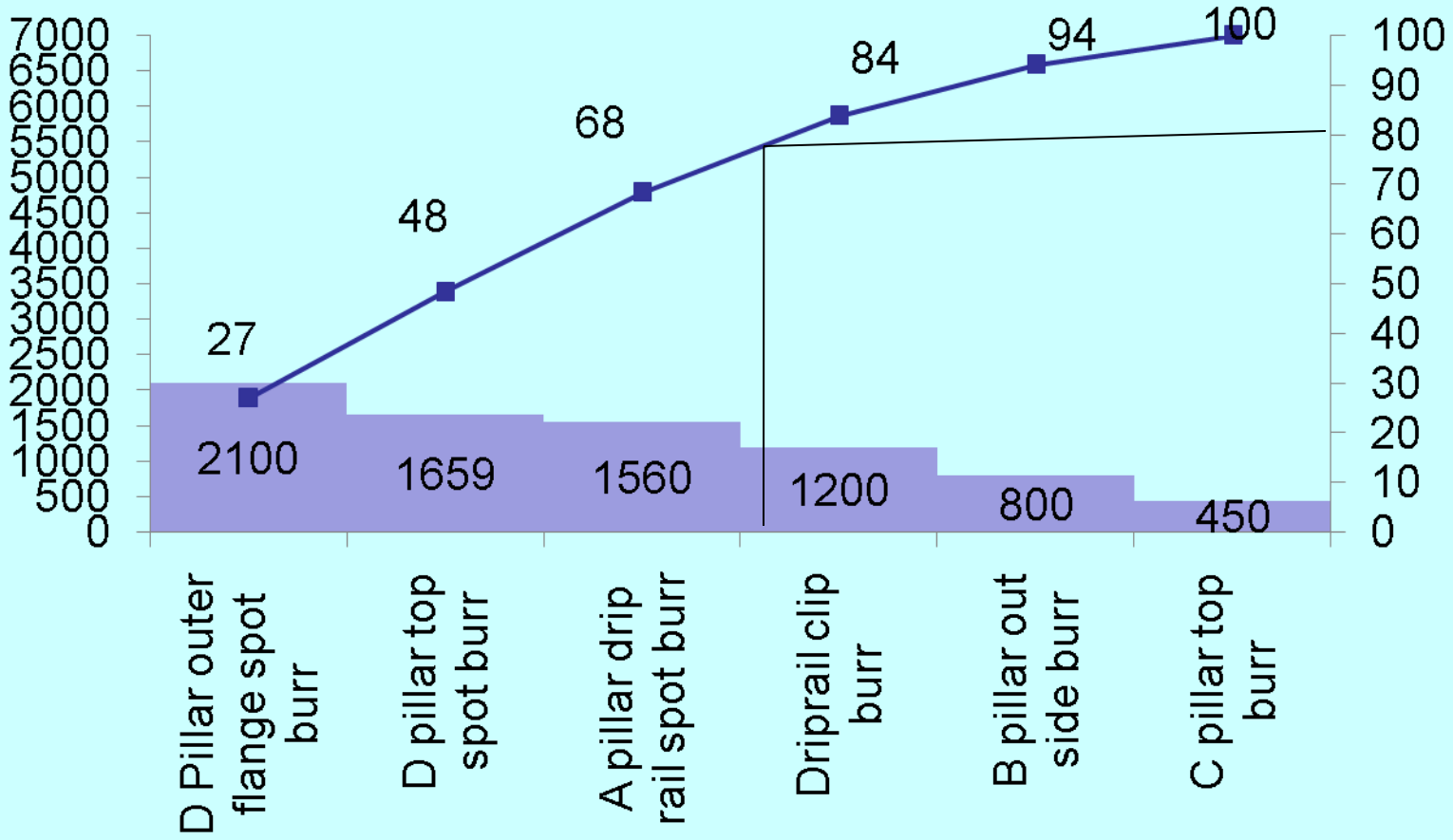

2.a Immediate Containment Action

1. 100 % check by Side check man

2.100 % Deburring at Sealer Stage(Z22- Stn70)

3. Understand the current situation

Observation of process

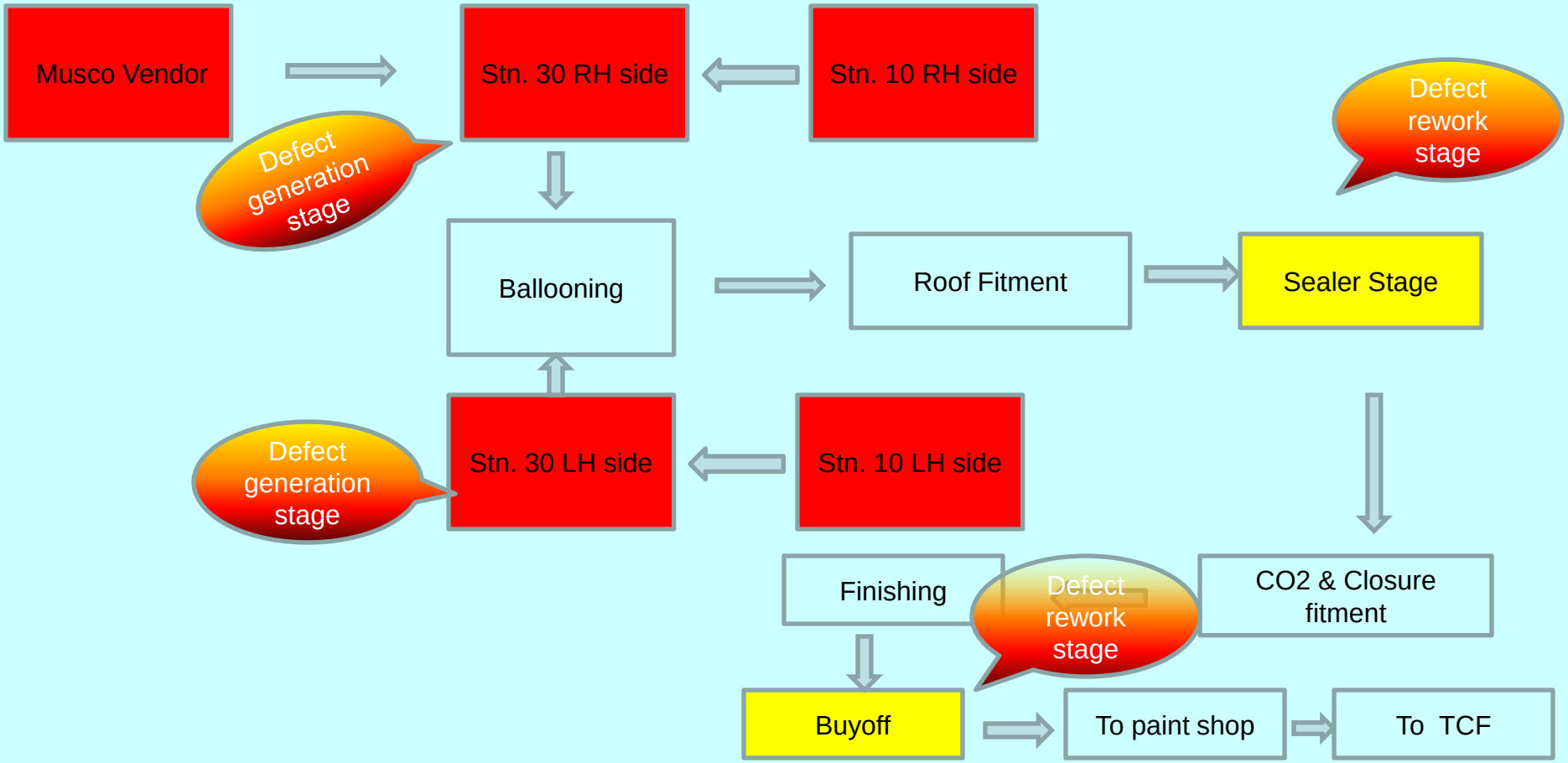

3. Understand the current situation

- D pillar outer flange & Qtr inner Assy flange mismatch ,due to this phenomenon spot coming on edge.

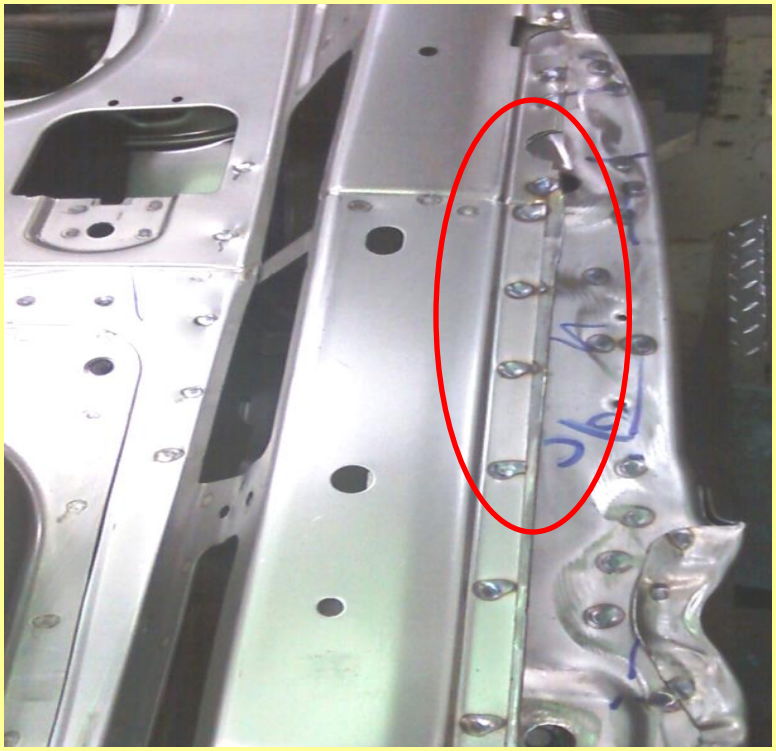

3. Understand the current situation

- C-gun Tx-87 Gun holder used for spot welding D pillar outer flange & Qtr inner Assy (total 9 spots taken by this gun)

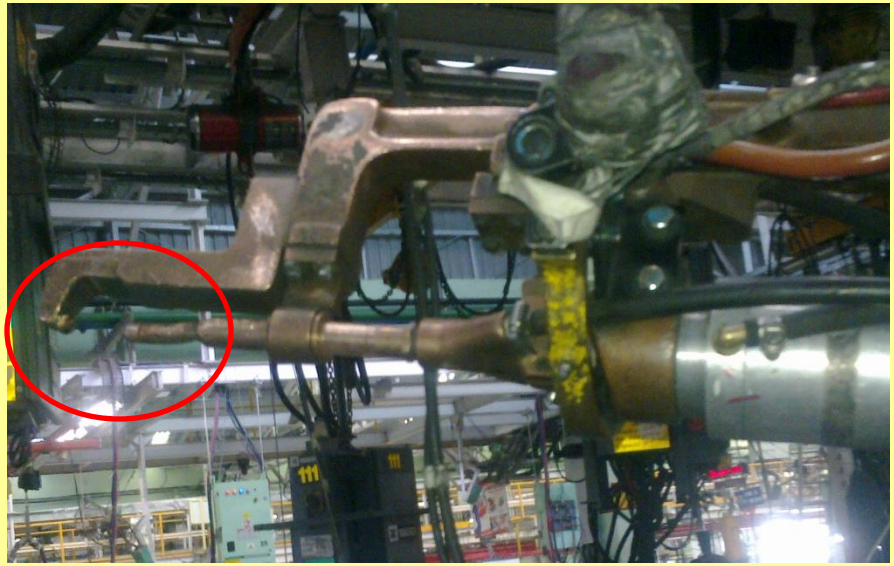

Tip becomes reddish and deforms after 5 to 6 bodies

3. Understand the current situation

- C-gun Tx-66 Gun holder used for spot welding D pillar outer flange & Qtr inner Assy (total 11 spots taken by this gun)

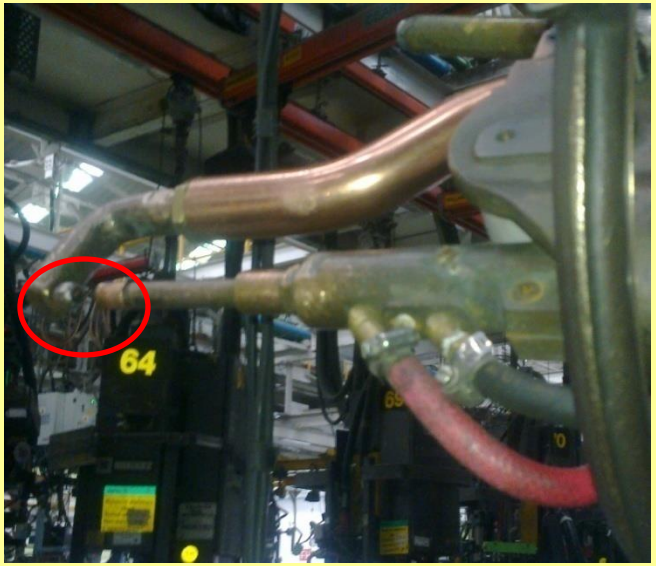

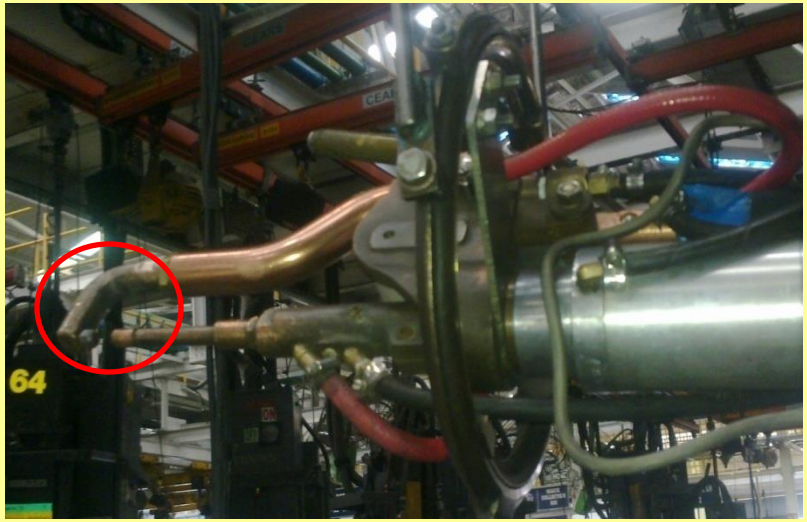

Tip becomes reddish and deforms after 5 to 6 bodies

3. Understand the current situation

- Cost of poor quality increases
- One extra Polish paper is consumed for day =12.75/- day
- Gap in D pillar & Qtr inner Assy flange

4. Select Target

Present Level:

2100 incidences in April & May

Target:

1. Elimination of concern in FRC
2. Zero concern at TCF, CAI, RFI, PDI

4. Select Target

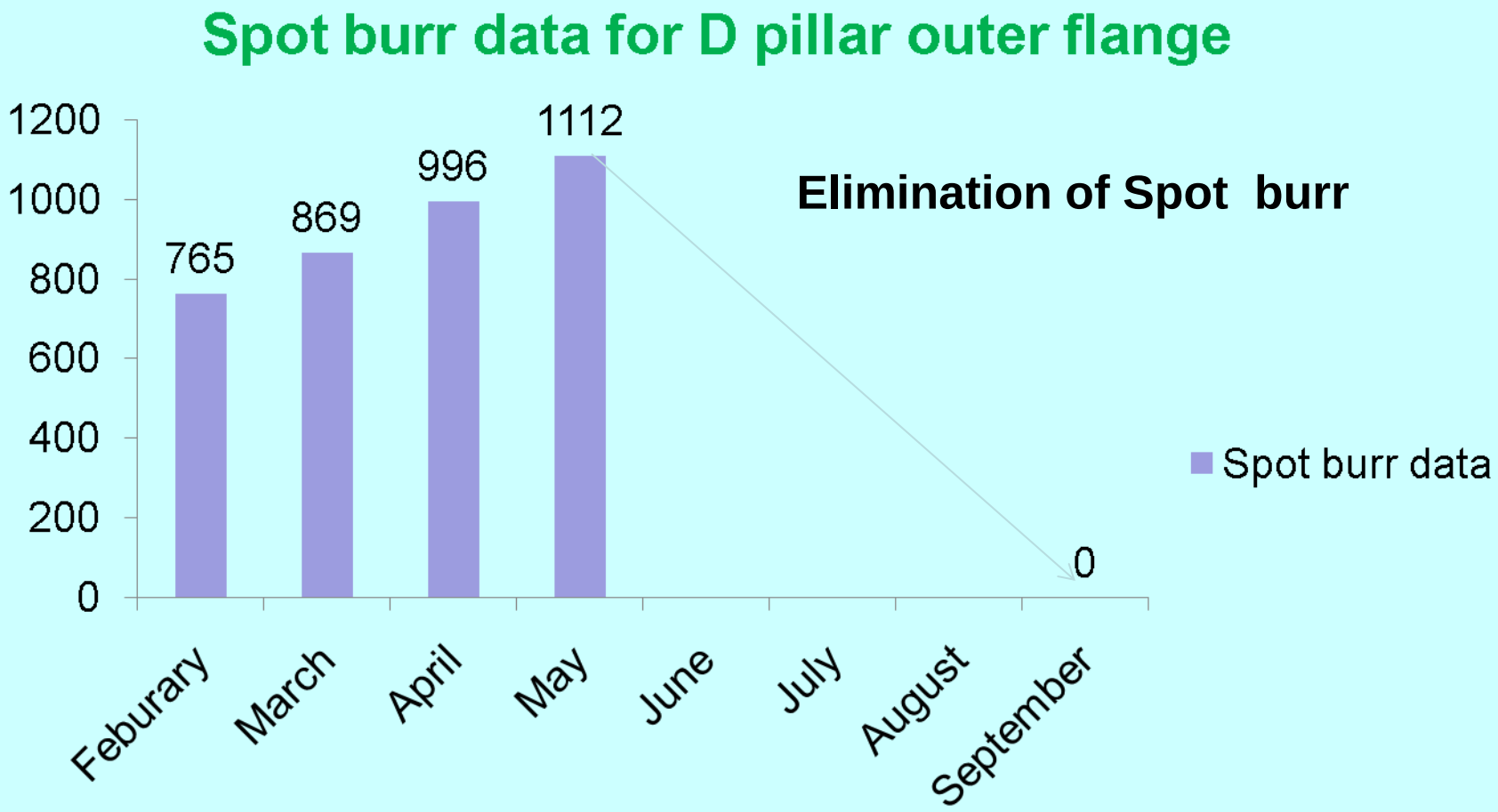

5. Analysis

5.1 Identify possible causes:

1. Gap between the both the panel

2. Panels are mismatch

3.Spot on edge concern

4. Spot welding parameters not ok

5.Gun alignment not ok

6.Frequent tip worn out

7. Excessive heating of tip

8.Gun movement not easy for spot welding

5. Analysis

5.1 Identify possible causes:

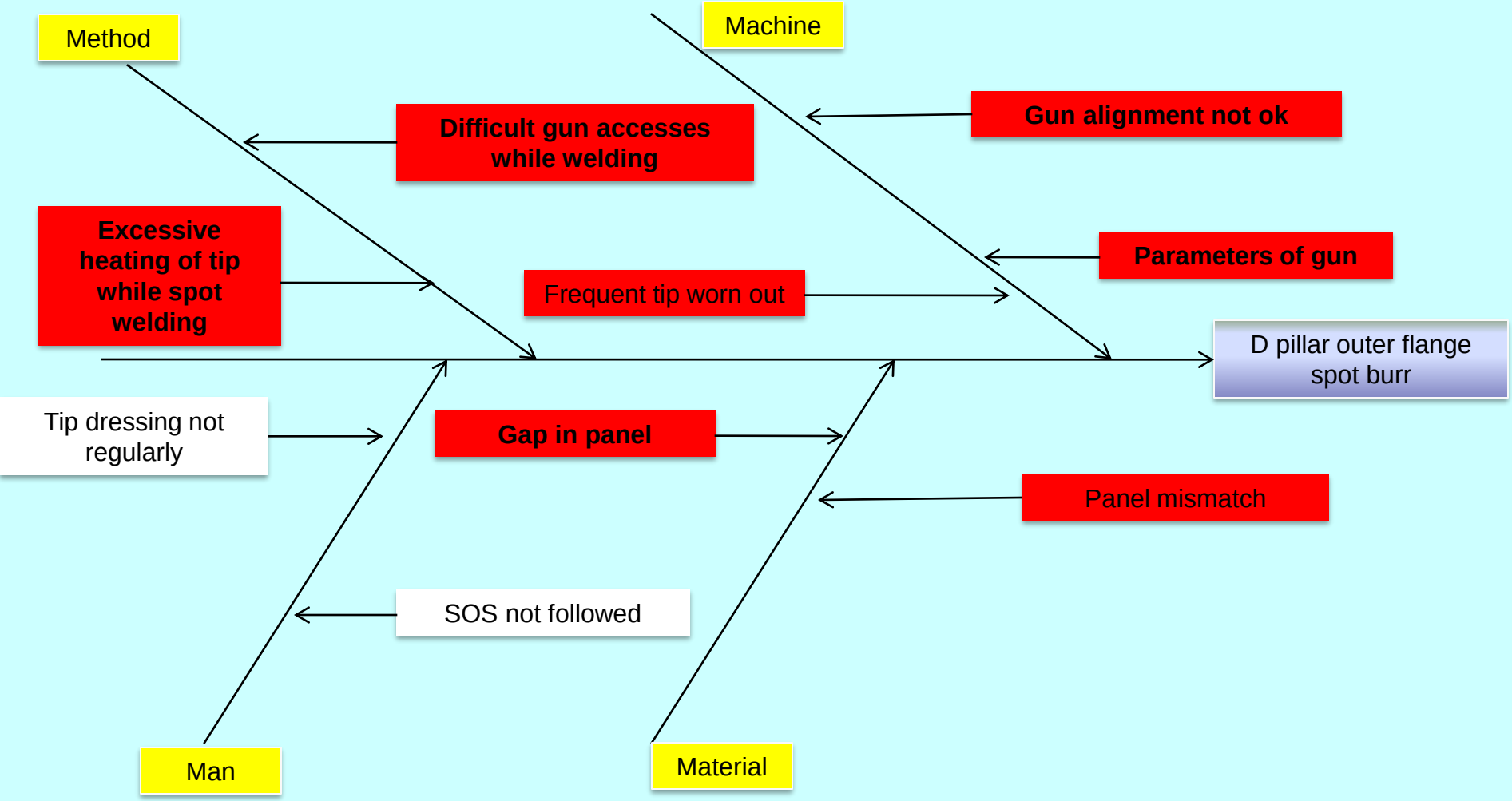

Note- Red blocks indicates the Probable causes

5. Analysis

5.2 List of Probable causes:

1. Gap between both the panels.

2. Difficult gun accesses while welding

3. Panel mismatch

4. Excessive heating of tip while spot welding

5. Parameters of gun

6. Gun alignment not ok

7. Frequent tip worn out

TEST OF HYPOTHESIS

5.2 Confirm the probable cause:

No	Probable Cause	Testing Method	Observations	Conclusion
1	Gap between both the panels.	By Vernier caliper	90 sides out of 100 found having gap of 1.5-2.2 mm against complete matching of parts	**Hypothesis valid**

Some readings are shown

Sr No.	Gap(in mm)	Sr No.	Gap(in mm)
1	1.5	11	1.8
2	1.6	12	1.6
3	2	13	1.6
4	2.1	14	1.9
5	1.7	15	2.1
6	1.6	16	1.8
7	1.5	17	1.9
8	2	18	1.6
9	2.2	19	1.5
10	1.7	20	1.6

TEST OF HYPOTHESIS

5.2 Confirm the probable cause:

No	Probable Cause	Testing Method	Observations	Conclusion
2	Difficult gun accesses while welding	spot welding Assy personally	Operator has to pull the gun as well as transformer while spot welding which becomes very tedious ,leading to inclined angle of gun & hence spot burr	**Hypothesis valid**

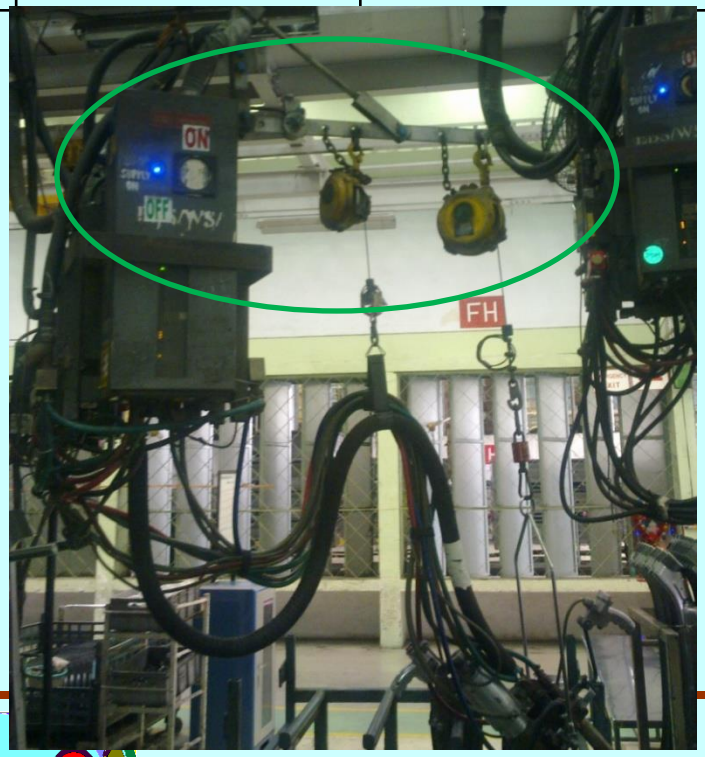

TEST OF HYPOTHESIS

5.2 Confirm the probable cause:

No	Probable Cause	Testing Method	Observations	Conclusion
3	Panel mismatch between D pillar outer flange & Qtr inner Assy.	No mismatch	100 sides out of 100 found having panel mismatch	**Hypothesis valid**

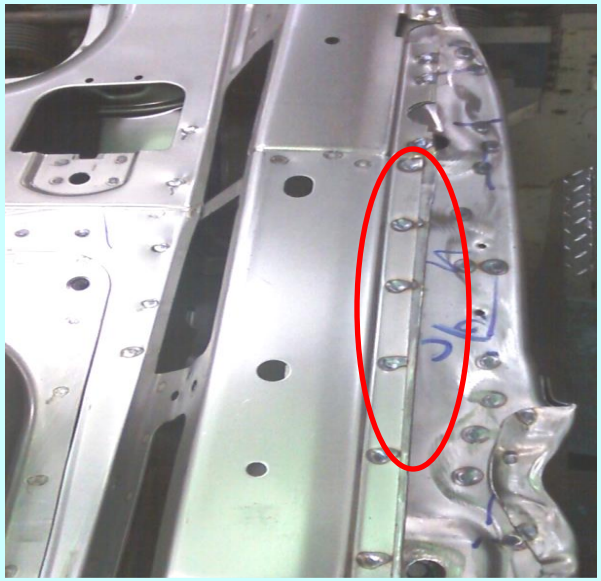

TEST OF HYPOTHESIS

5.2 Confirm the probable cause:

No	Probable Cause	Testing Method	Observations	Conclusion
4	Gun tip excess heating	**Standards (Temperature sensor)** After spotting tip temp should fall from 900 Degree to Zero degree within 10 seconds	Quick uneven deformation of tip leading to disturbance in gun alignment (temperature found around 1100 degree after spotting)	**Hypothesis valid**

Tip condition after few spotting

Before

After

Gun alignment disturbed

TEST OF HYPOTHESIS

5.2 Confirm the probable cause:

No	Probable Cause	Testing Method	Observations	Conclusion
5	Wrong parameters	Refer design parameter	Parameters found ok with respect to design parameter of both guns	**Hypothesis invalid**

Gun parameters

	Tx-66 Actual	Tx-66 Designed	Tx-87 Actual	Tx-87 Designed
1. Squeeze time-	25	24	22	22
2. Weld time-	14	14	14	14
3. Hold time-	10	10	10	10
4. Force -	300 Kgf	300Kgf	300Kgf	300 Kgf
5. Current-	9 KA	9 KA	9 KA	9 KA

TEST OF HYPOTHESIS

5.2 Confirm the probable cause:

SR. No.	Probable Cause	Testing and Observations	Conclusion
1.	Gap in panel	Check 100 sides and found gap in D pillar & Qtr inner Assy for 90 sides	valid
2.	Panel mismatch	Check 100 parts & found Mismatch between D pillar & Qtr inner Assy for all parts on RH side	Valid
3.	Gun Spotting angle wrong	Observation of 60 bodies done & gun accesses found difficult while welding D pillar	Valid
4.	Gun tip excess heating	No cooling to gun tip which leads to excessive heating & spot burr formation	Valid
5.	**Wrong parameters**	**Parameters checked found ok**	**Invalid**

WHY - WHY Analysis

5.3 Identify the root causes:

Sr No	Probable cause	why	why	why	Why	why
1	Gap in panel	Part not located correctly	Fixture pressure less	Fixture shimability not ok	RC: Myler height in Y – direction not sufficient	
2.	Panel mismatch	Part not fitting correctly	Part coming from vendor not ok	Reinforcement fouling in D pillar	D pillar fouling from Back side	RC: Spot sequence wrong leading to fouling
3.	Gun handling difficult	Spotting not within reach (hectic)	Gun orientation not ok	Transformer has to be dragged while spotting with gun	RC: Due to Leverage layout of gun & transformer	

WHY - WHY Analysis

5.3 Identify the root causes:

Sr No	Probable cause	why	why	why	why	Why
4.	Gun high heating	Gun alignment not ok	Bush worn out	Frequent tip worn out	Excessive heating of gun tip	RC: No cooling to gun tip

6. Implement the corrective measures

Root Cause	Action Plan	Target Date	Resp	Status
1. Myler height in Y –direction not sufficient	**1.** Myler block at stn10 RH taken upwards by 1.5mm (Y- direction)for D pillar	**24.06.12**	**Vivek Bhat**	**Closed**

Before

After

6. Implement the corrective measures

Root Cause	Action Plan	Target Date	Resp	Status
2.Spot sequence wrong leading to fouling	A) Additional Magnetic block provided on D plr fixture to avoid fouling of two Reinforcement of D plr (MUSCO) B) Supporting block provided from backside to arrest D plr to avoid fouling(MUSCO) C) Initially spot sequence taken from inside to outside leading to reinforcement twist now spot sequence taken from outside to inside to avoid Reinforcement twist (MUSCO)	20/7/12 25/7/12 30/7/12	Mangesh	Closed

6. Implement the corrective measures

Before

NA

No block or stopper available to arrest D pillar from rear

After

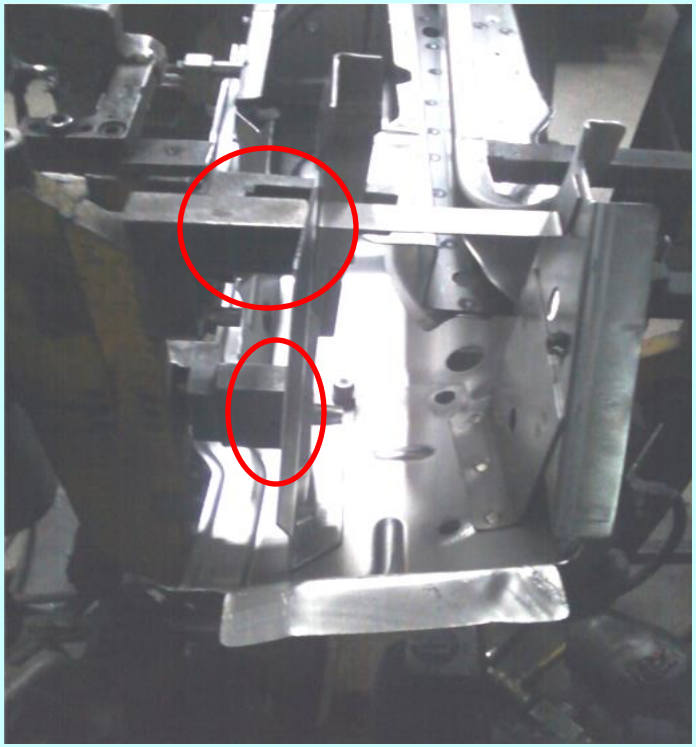

Block or stopper provided to arrest D pillar from rear

6. Implement the corrective measures

Before

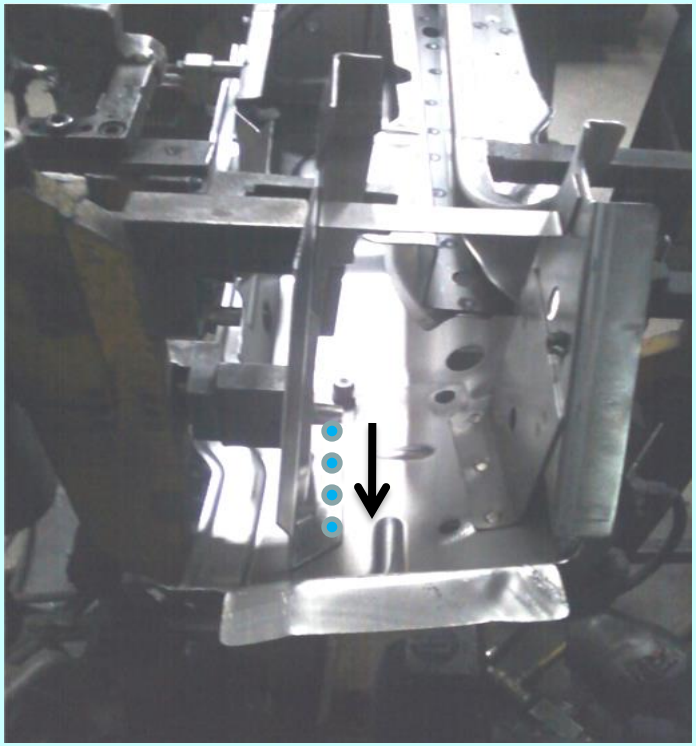

Spots were taken from inside to out side leading to reinforcement twist

After

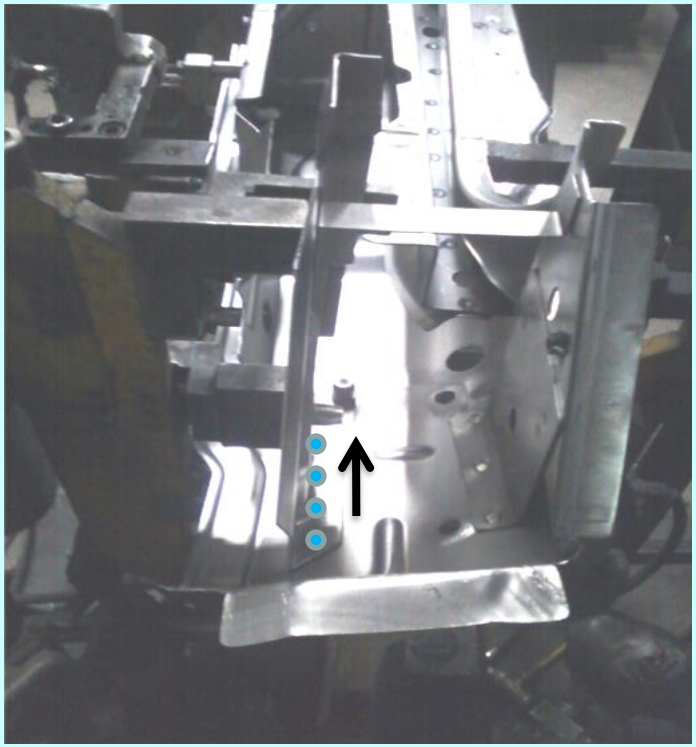

Spot sequence changed to outside to inside to avoid twist of two reinforcement

6. Implement the corrective measures

Before

NA

No block available to arrest D pillar from rear

After

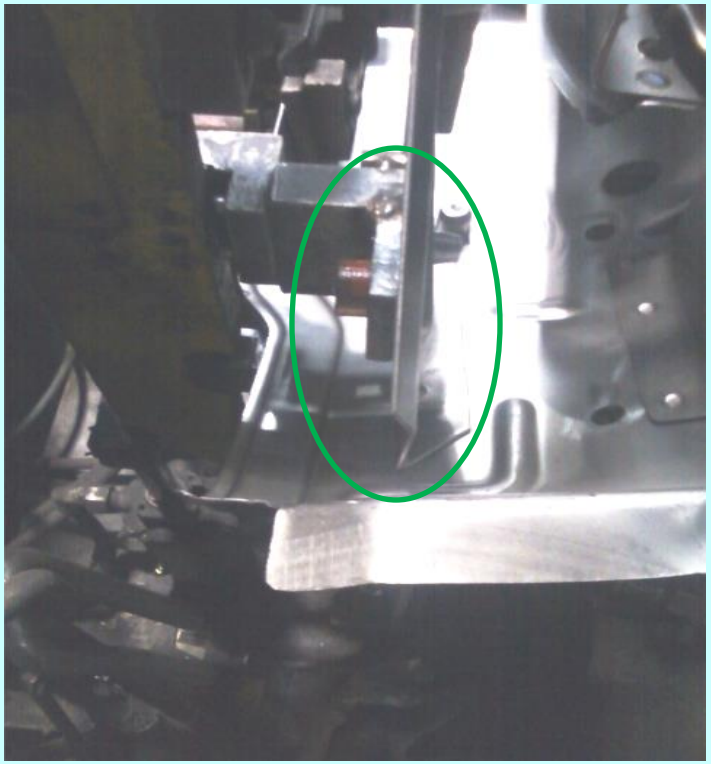

Additional Magnetic provided to arrest D pillar from rear

6. Implement the corrective measures

Root Cause	Action Plan	Target Date	Resp.	Status
3. Due to Leverage layout of gun & transformer	Existing leverage arrangement leads to hectic work for operator, while spotting he has to drag the entire transformer. which is now replaced by monorail by shifting transformer on backside and gun balancer on separate monorail at front side	14/7/12	Sanket	Closed

6. Implement the corrective measures

Before

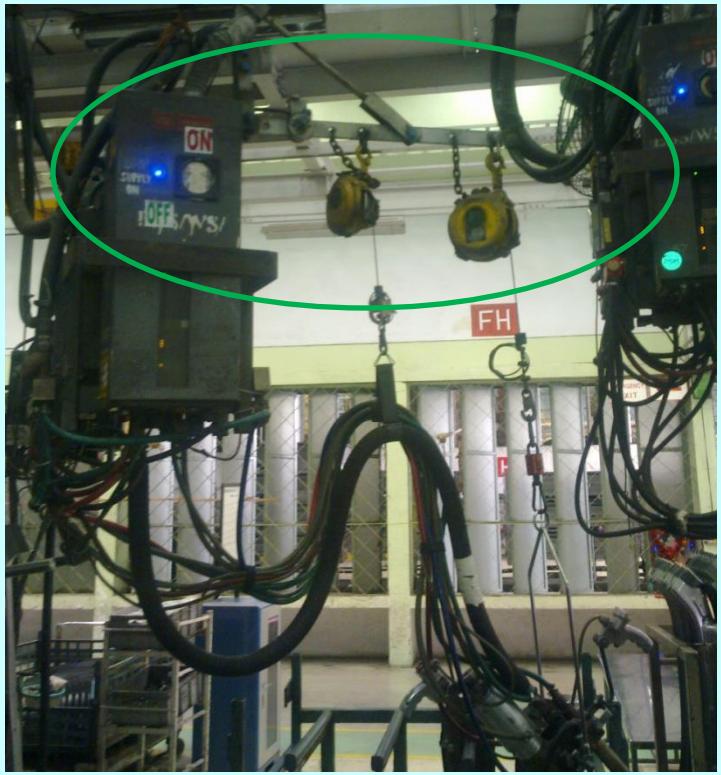

Existing leverage arrangement leads to hectic work for operator, while spotting he has to drag the entire transformer.

After

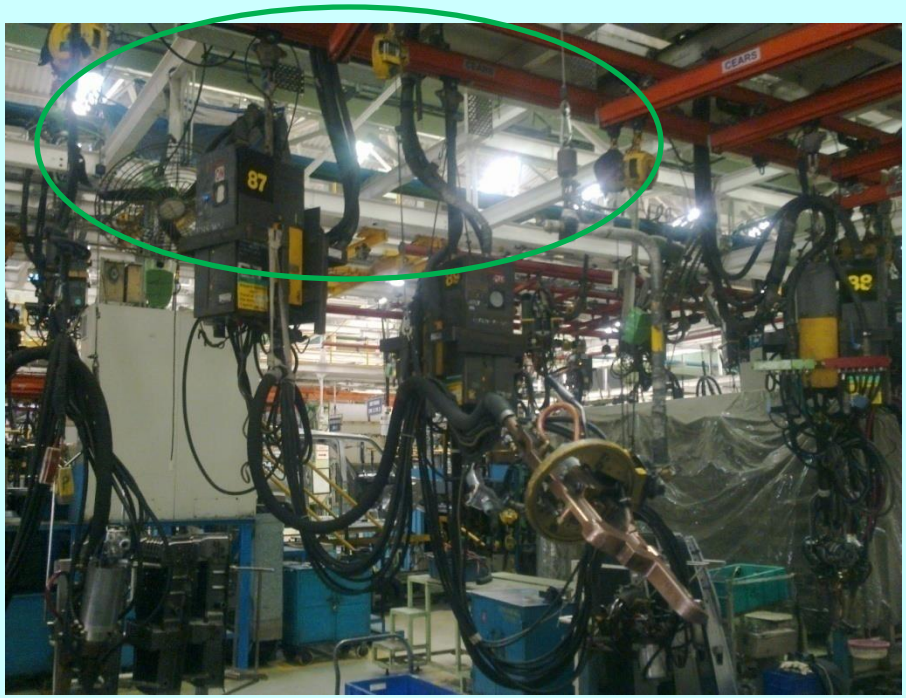

Now replaced by monorail by shifting transformer on backside and gun balancer on separate monorail at front side

6. Implement the corrective measures

Root Cause	Action Plan	Target Date	Resp.	Status
No cooling to gun tip	Gun holder & tip design to be changed Water circulation routing to be done till gun tip head	1/8/12	Sanket	Closed

Before

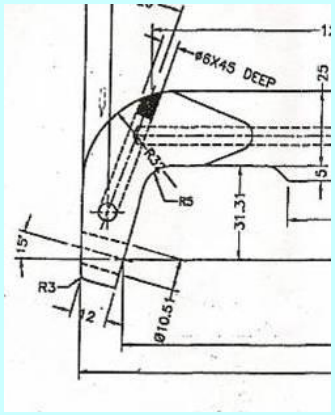

After

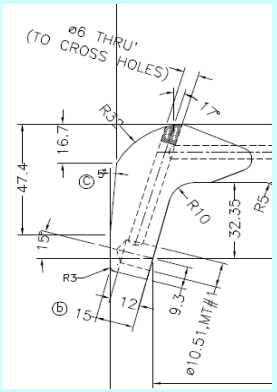

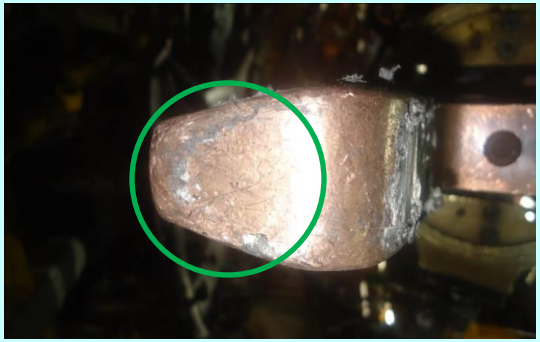

NO cooling to tip due to throughout section of holder

Cooling provided to tip by plugging holder from back and drill up to 13mm

6. Implement the corrective measures

Root Cause	Action Plan	Target Date	Resp.	Status
No cooling to gun tip	Gun holder & tip design to be changed Water circulation routing to be done till gun tip head	1/8/12	Sanket	Closed

Before

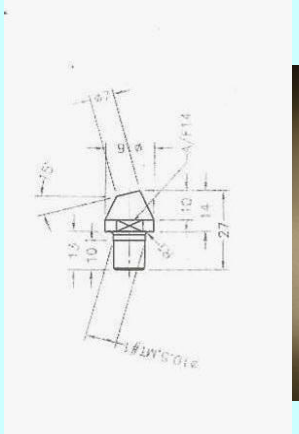

Solid tip with no cooling

After

Groove added

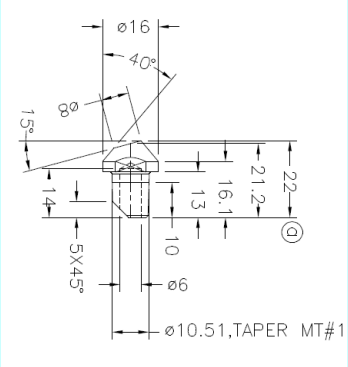

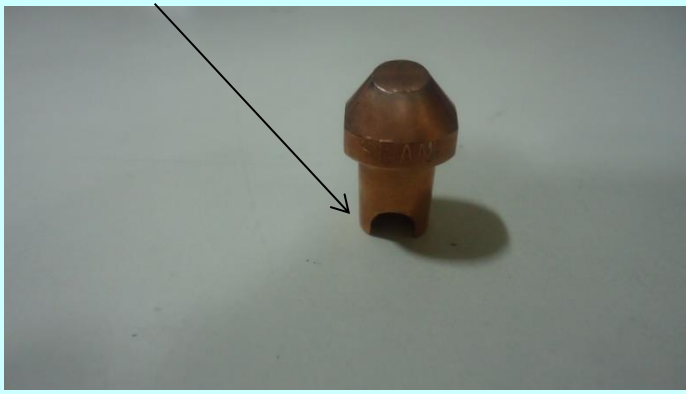

Hollow tip for water circulation

6. Implement the corrective measures

Root Cause	Action Plan	Target Date	Resp.	Status
No cooling to gun tip	Gun holder & tip design to be changed Water circulation routing to be done till gun tip head	5/8/12	Sanket	Closed

Before

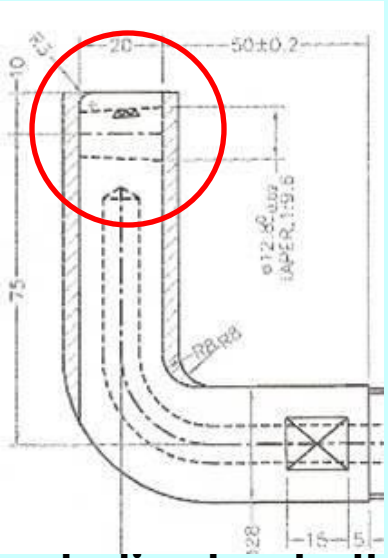

NO cooling to tip due to throughout section of holder

After

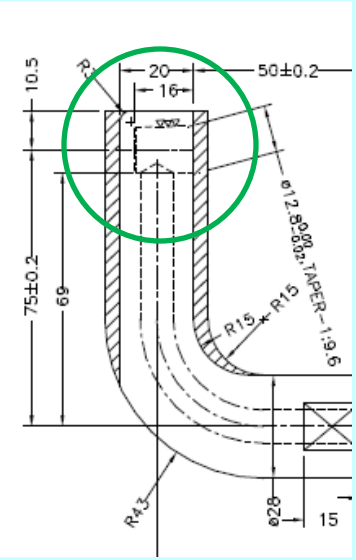

Cooling provided to tip by plugging holder from back and drill up

6. Implement the corrective measures

Root Cause	Action Plan	Target Date	Resp.	Status
No cooling to gun tip	Gun holder & tip design to be changed Water circulation routing to be done till gun tip head	5/8/12	Sanket	Closed

Before

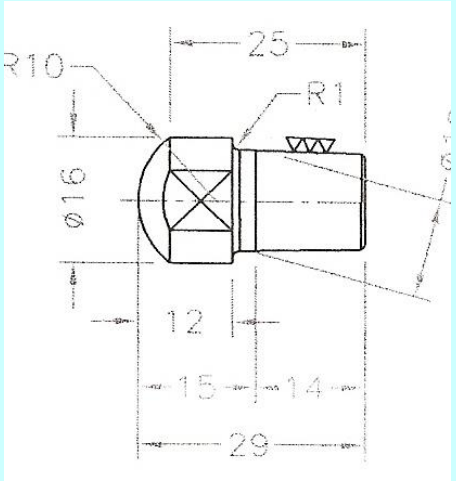

Solid tip with no cooling

After

Groove added

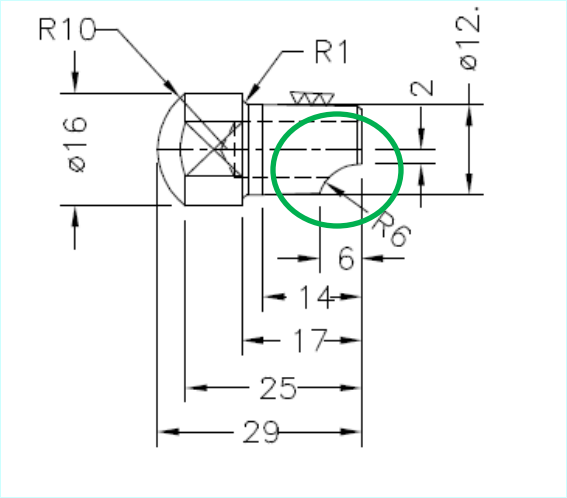

Hollow tip for water circulation

7. Check & confirm the results & effects

7.1 Verify Results:

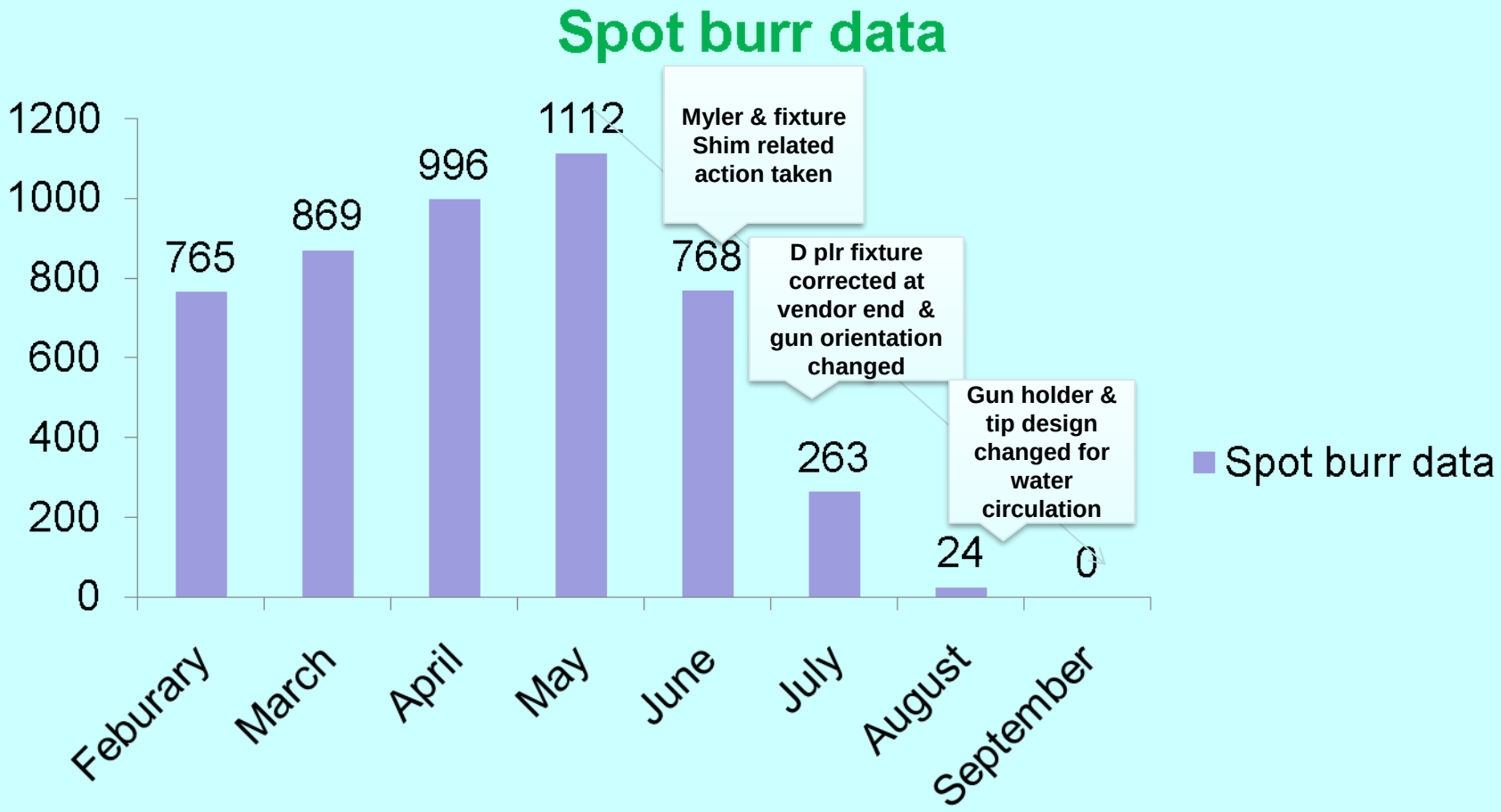

7. Check & confirm the results & effects

7.2 Full Scale Implementation plan:

1.All decided actions implemented as on 12.08.2012

2. Effectiveness of actions has been audited on 12.09.2012 by MQA team

Check & confirm the results & effects (Cont…)

7.3 Tangible

1. Spot burr concern reduced to Zero from 2100 incidence in month of April & May

2. Zero incidences at TCF,CAI,RFI,PDI from last 2 months.

3. COPQ for April to Sep'12 brought down compared to April to Sep '11 for spot burr concern

Overall saving

April –sep'11 - 84348.5 /-

April-Sep'12 - 79749/-

= 4599.5 /- saving

D pillar burr related saving

for June to sep'12 by one polish paper daily

=12.75*102 days

= 1300/-

Check & confirm the results & effects (Cont…)

7.3 Tangible

Cost saving Benefits

	Before	After
Productivity	Tip need to be replaced after 3300 spots	Tip needs to be replaced after 9500 Spots
Quality	1.Carbon deposition on tip after few spots 2.Spot burr was repetitive concern	1. No carbon deposition on tip due to cooling 2.Spot burr eliminated
Cost	**Rs. 33,000/- Annum**	

Calculation

Before: 50Rs * 2tip * 300 days=30000/-
(No. of spots=3350 Approx.)

After: 75Rs * 0.6tip * 300days=13500/-
(No. of spots=13000 Approx.)

Saving =16500/- per annum for one gun

Saving for two gun =16500*2= **33000/-annum**

Check & confirm the results & effects (Cont…)

7.3 Intangible benefits:

1. Morale improved
2. Team Work Builtup
3. Confidence Boost up

8. Standardisation

8.1 Updation of documents:

1. Welding fixture History card report (MUSCO)

MUSCO STAMPINGS NASIK		WELDING FIXTURE HISTORY CARD								DOC. NO. : QF/TR/08 REV. NO. : 00 DATE : 20/08/12 PAGE NO. : 01 OF 01
PREPARED BY : DANGE S. R.				APPROVED BY : VADER G.						
SIGNATURE :				SIGNATURE :						
DATE :	27-Sep-2012									
SR.NO.	FIXTURE NUMBER	ASSY NAME	UNIT NO	CONCERNS / PROBLEM	CORRECTIVE ACTION TAKEN	DATE	ACTION BY	TIME	STATUS	REMARK IF ANY
6987	WF0101EG3880N-	PILLAR D ASSY RH (STAGE -2)	1	NEW MAGNET FITTING WORK	NEW MAGNET PROVIDED BLOCK SET & THEN WELDING DONE OBS OK.	20/7/12	AHP/JBS	0.45	OK	IMPROVEMENT
7082	WF0101EG3880N-	PILLAR D ASSY RH (STAGE -2)	1	TRAIL ASSEMBLY	LOCATION PIN BLOCK & RESTING BLOCK 4MM & 2MM SIM ADD, TRAIL ASSEMBLY TAKEN & THEN REWORK DONE OBS OK.	25/7/12	BPP/JBS	1.2	OK	M&M REQUIRED
7143	WF0101EG3880N-	PILLAR D ASSY RH (STAGE -2)	1	BKT SHIFT	SLIDING UNIT ON MOUNTING BLOCK SURFACE GRINDING & SHIMMING DONE OBS OK.	30/7/12	BOROLE	0.45	OK	IMPROVEMENT

8. Standardisation

8.1 Updation of documents:

2. Fixture History updation

FIXTURE HISTORY CARD					
ZONE:	Z12				DEPT : MFG ENGG.-SCORPIO BODY
FIXTURE NO.	Z12-10		FREQUENCY : 6 Months and/or whenever changes done		
ASSY NAME:	SIDE Rh 10				
DATE	UNIT NO	ITEM NO.	CONCERNS	CHANGES DONE/ ACTION TAKEN	REMARKS
19/04/10			Spot Damage C pillar Rh	Copper plate mtg changed(Made more thick then gun opening)	FTBO Aprl-10
27/5/10			Damage - A pillar	L Stopper provided to A pillar bottom side cu plate	Nova B
31/8/2010			Spot broken RH A piller Drip rail	Cu plate mounting floating sleeve(pin) length made uneven & mounting hole plugged.	CA2P00299
3/9/2010			Spot damage B Pillaer Rh Due to float and improper constraing	Additional support provided to constrain the float	FTBO Aug-10
27/10/10			Damage\Spot Damage A piller Profile area	Stopper provided to avail gun access	FTBO Oct-10
29/10/2010			Excess Gap - Qtr otr to D plr	D plr bottom side setting Cylinder bolt lowered by 3 mm.	
5/11//2010			Spot damage RH B plr bottom	Width of the cu plate increased	CA 2P 0321
25/9/10			Spot pin hole LH A pillar	Cryogenic Cu plate proided	
18/11/10			Spot damage on A Pillar	Guard thickness increased	Scrap Nov-10
8/12/2010			Heavy Damage Ring panel & Qtr Otr	Malfunctioning cylinder replaced by new	Scrap Dec-10
17/1/11			Damage - A pillar RH	A pillar to Driprail L type cu plate play resrticted.	QCRT No CA 2P359
20/4/11			RH D plr seat belt mtg. hole mismatch	1 mm shim correction in clamp towards X(-) direction for extra pressure.	
4/25/2011			Bolt half torque and slipage	Play in fender A pillar mtg catch reduced	PDI 27/04/11
30/04/2011			Damage A pillar Rh	Copper plate float optimized	FTBO Aprl-11
12.05.2011			Damage side assy at stn 10	Nylon stopper provided	Scrap May 11
17/5/11			Rhs D pillar fitment issue at Rh side assy	1.5 mm shim correction in clamp towards X(-) direction for extra pressure	
28/06/11			Spot Damage drip rail back side	Guard modified to add curve line shape	FTBO July-11
15/07/2011			Damage C Pillar outer	Broken copper plate mtg modified	FTBO July-11
8/12/2011			Damage - B pillar RH	Nylon guard provided on B plr cu plate mtg	QCRT CA2P430
27/08/2011			Damage rocker panel lower bottom	1.Rubber insulation provided 2..Clamping leaverage reduced	FTBO Aug-11
10/14/2011			Spot on edge Rh C Pillar bottom	Cu Plate mtg reinforced	CA3P119
16/10/11			----------	A_PLR_OTR_UPR_LOC_PIN has shifted in +ve X-direction by 0.5mm	as per CMM checking
5/11/2011			PILLAR	Nylon guard provided	FTBO Oct-11
10/12/2011			Damage A pillar spot dent	Stopper provided on copper plate mtg block	CA2P0491
23.12.11			Excess gap between quarter outer & D pillar Rhs	Provided Nylon myler for resting	i4-21278
26.12.2011			Fouling Frnt door to fender bolt LH	MS Stopper provided to fender mtg bkt resting	i4-21272
06.01.2012			Spot Ding/Dent D Pillar Top	Gun guide provided	CA3P129
20.01.12			Spot damage at D Pll area	Gun guide modified to avoid spot on wrong location	
28/4/12			Spot damage RH C plr	New cu plate with increased width provided	CA 2P 571
12/5/2012			Damage rocker panel lower bottom	PU miler covered on resting myler	CA 2P 584
26/6/12			Panel gap between qtr inner assly to D plr outer	1.5mm shim added in Y direction	Chronic D plr mismatch
4/7/2012			Damage C Pillar outer	Clamp protected by Rubber insulation to avoid sharp edges.	CA 2P 610

Page 1

8. Standardisation

8.1 Updation of documents:

5. Gun holder drawing Approval/certification

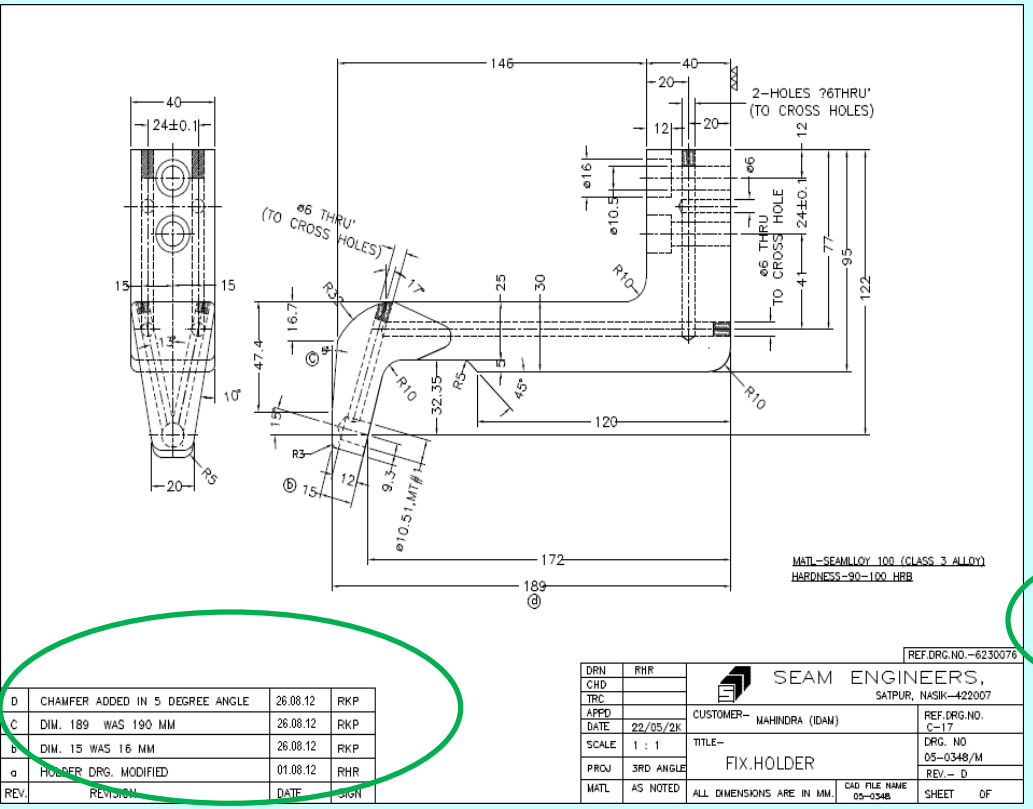

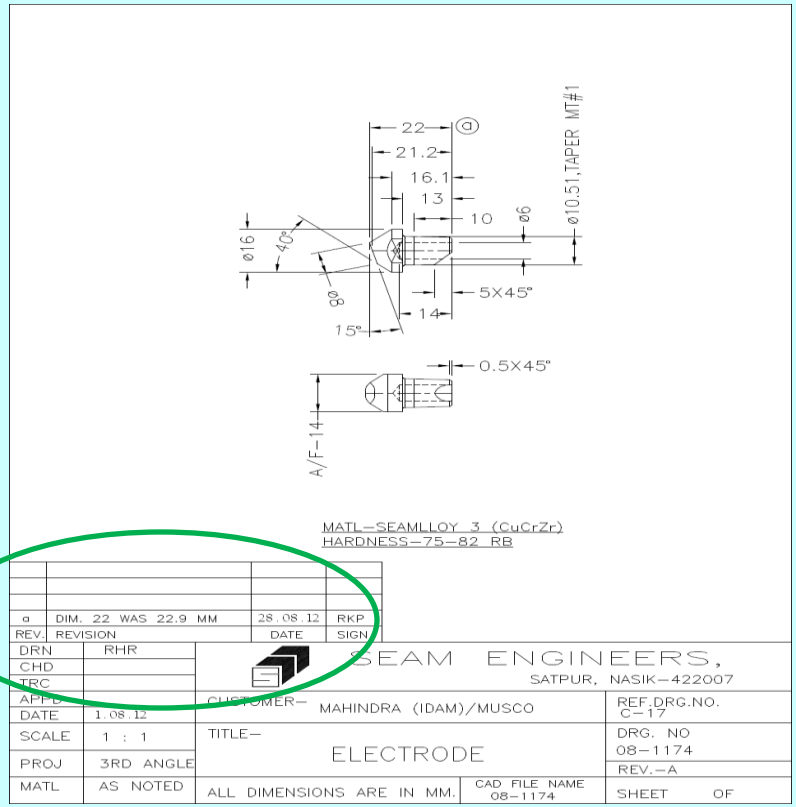

8. Standardisation

8.1 Updation of documents:

5. Gun holder drawing Approval/certification

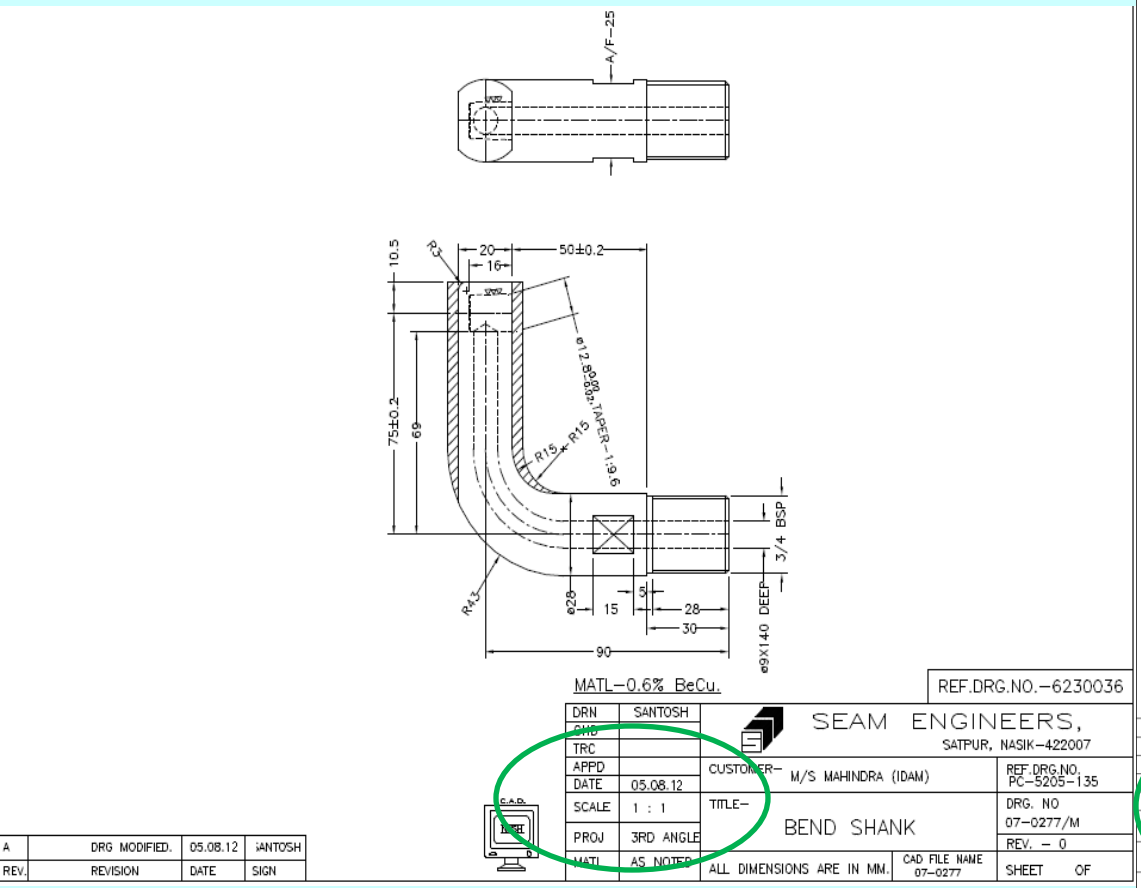

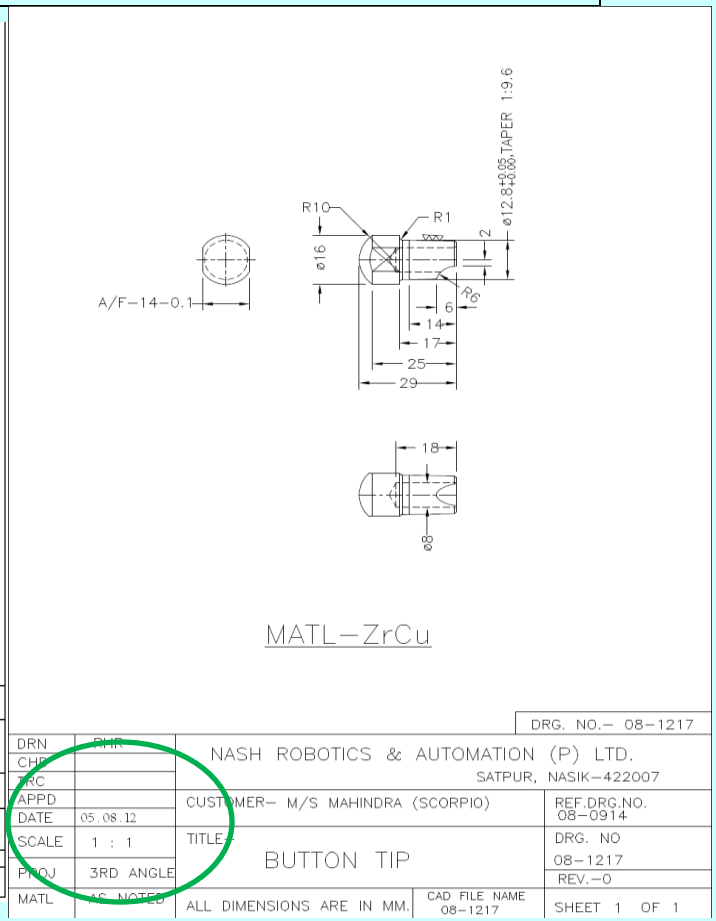

8. Standardisation

8.2 Training:

1. OPL

8.3 Additional Audit / Check

1. Supplier Audit
2. 2A-2B audit
3. Supervisory check sheet

9. Summarise & Plan future actions

9.1 Conclusion:

Spot burr concern at D pillar outer flange eliminated by modifying the gun holder design ,which shows that water circulation or water cooling is so important phenomena for spot welding & also ergonomy of work station

9.2 Horizontal Deployment:

1. At 10 location in W shop

9.3 Lessons Learnt:

Things Gone Wrong : Wrong holder design was done during development.

Things Gone Right : we challenged the design of holder and got successful this shows anything can be challenged

Thank You……..